VERSION	CHANGE CONTENT	DATE
V00	FIRST ISSUE	2023-12-06

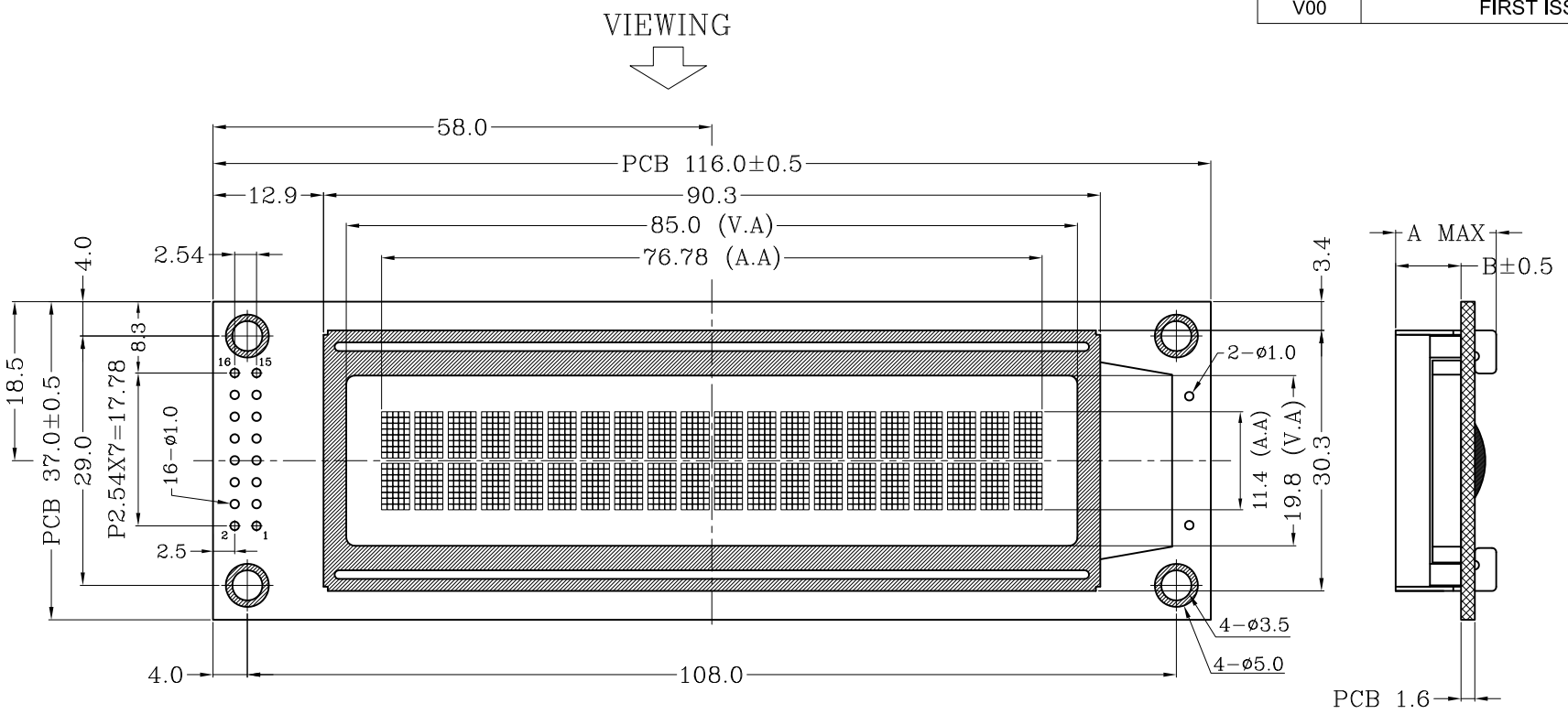

TYPE	A	B
LED B/L	12.2	7.6

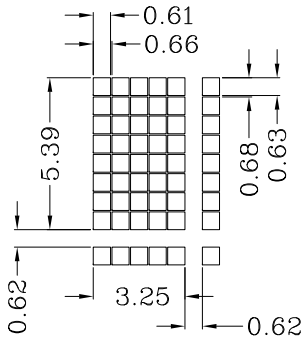

DETAIL DOTS
SCALE: 3:1

PIN	1	2	3	4	5	6	7	8	9	10	11	12	13	14	15	16
NAME	VSS	VDD	V0	RS	R/W	E	DB0	DB1	DB2	DB3	DB4	DB5	DB6	DB7	LED+	LED-

SPECIFICATIONS
1. DISPLAY TYPE: DFSTN/TRANSMISSIVE/NEGATIVE/B-W/Anti UV
2. LCD DRIVING VOLTAGE: 4.7V
3. LOGIC VOLTAGE: 5.0V
4. VIEWING DIRECTION: 12 O'CLOCK
5. OPERATING TEMP: -20°C~70°C
6. STORAGE TEMP: -30°C~80°C
7. DRIVE MODE: 1/16 DUTY,1/5 BIAS
8. BACKLIGHT: BLUE/SIDE BACKLIGHT/5.0V
9. OTHER:
MECHANICAL TOL.±0.3 UNLESS SPECIFIED

NOTE:

DESCRIPTION: C/D

SCALE: FIT

SHEET: 1 OF 1

TINSHARP INDUSTRIAL CO.,LTD.

PROJECTION	MODEL	SERIAL NUMBER
UNIT: mm	TC2002A-36A	XLL1302

APP:	CHK:	DWN:
DATE:	DATE:	DATE: